# GlasStile S

## Motorized ADA Compliant Entrance Gate

Originally designed to comply with the Americans with Disabilities Act of 1990 and address a missing link in the entrance control marketplace, the GlasStile S gate can now be found in many different settings with multiple applications. Not just your run-of-the-mill gate, the GlasStile S is supported by a microprocessor, allowing it to be completely integrated within any access control system while keeping potential intruders in check.

The GlasStile S can interface with any card reader, remote control, emergency pushbutton, or other access control system to provide secured access through the gate. Designed to automatically open under power failure or fire alarm emergency, the GlasStile S is a perfect solution when authorized ADA access or service cart entry is required.

When installed in proximity to existing entrance turnstiles, the GlasStile S can replace the need for expensive additional ADA compliant turnstiles. And when space is limited, the GlasStile S may be a perfect fit, providing the required ADA option where conventional optical or mechanical turnstiles may be too large. Where a wider service entrance is required, GlasStile S gates can also be configured as a tandem pair.

Gunnebo offers custom housing materials such as stainless steel, brass, and muntz, and aesthetic details like logo etching and frosted glass panels. With its small footprint and custom glass sizes and materials, the GlasStile S can be tailored to suit any application.

GUNNEBO®
*For a safer world*

# GlasStile S

## Motorized ADA Compliant Entrance Gate

### TECHNICAL SPECIFICATIONS

| | | |
|---|---|---|
| **Orientation** | Pass Left or Pass Right | |
| **Unit Dimensions** | Column Height | 37.4" or 39.4" |
| | Column Diameter Width | 8.7" |
| | Standard Glass Barrier Height* | 35.4" (for 37.4" columns) or 37.4" (for 39.4" columns) |
| | Standard Glass Barrier Width* | 37.4" |
| | Standard Walkway Width* | 39.4" |
| | ** can be customized to site requirements* | |
| **Drive** | Motorized | |
| **Materials** | Rotor Column | 8.7" diameter #4 horizontal grained or polished stainless steel (other materials available on request) |
| | Rotor Wing | 0.39" thick tempered glass panel |
| **Interface** | Potential free contact provided by either a cardreader or pushbutton input. Cardreader *Inhibit* and *Reset* output signals available as standard. | |
| **Function** | Passage in both directions, electronically controllable. | |
| **Operation** | On receiving a signal from the access control system, the unit will unlock and drive through 90°away from the direction of the user. | |
| **Fire Alarm** | Input facility, for voltage-free contact supplied by others to effect fail state. | |
| **Power Supply** | 110VAC 60Hz (50Hz available). The circuit is fed via step-down transformer supplied with the unit. | |
| **Power Rating** | 80 VA per walkway; 1.8AMP at max usage. | |
| **Logic Voltage** | 24VDC | |
| **Flow Rates / Throughput** | *Please note these figures are approximate and must be confirmed with Gunnebo Entrance Control Inc. Figures quoted are for one person per complete passage per walkway, per minute. It is assumed the access control authorization response is instantaneous. Flow rates will increase with multiple passage use.*<br><br>30 single users per minute (dependent on access control system used). | |

GUNNEBO®
*For a safer world*

# GlasStile S

## Motorized ADA Compliant Entrance Gate

### ACCESSORIES & DESIGN OPTIONS

| | |
|---|---|
| **Alternative Materials, Finishes, and Custom Design** | • Refer to Gunnebo Entrance Control Inc. for specific material design requirements<br>• Alternative rotor cladding and casework materials<br>• Custom glass barrier dimensions or smaller panels for tandem operations<br>• Custom logos and etching on glass panels |
| **Card Reader Options** | • Refer to Gunnebo Entrance Control Inc. for feasability<br>• Cardreader pedestals available<br>• Proximity, magnetic stripe, biometric or barcode readers all compatible |
| **Remote Lane Control** | • Simple console to control the GlasStile S rotor release<br>• Remote console to specific requirements<br>• Pushbutton pedestal available |
| **Alternative Mounting** | Specialized mounting base platforms giving concealed cableway and requiring no drilling, trenching, or core drilling to the floor. |
| **Infill Panels** | Where extra space presents in a design, integrated or standalone space infill solutions can be provided. |
| **Pushbar** | Affixed to the top of the glass wing to match casework choice. |

*Example of the GlasStile S configured as a tandem pair .*

GUNNEBO®
For a safer world

# GlasStile S

## Motorized ADA Compliant Entrance Gate

### STANDARD DIMENSIONS FOR GLASSTILE S 37.4" COLUMN HEIGHT MODEL

Dimensions given are for 37.4" high model with 35.4" high glass panels. 39.4" high columns also available (37.4" standard glass height). Glass height and width will vary per site requirements. For installation details, please refer to the installation manual.

### PLAN VIEW

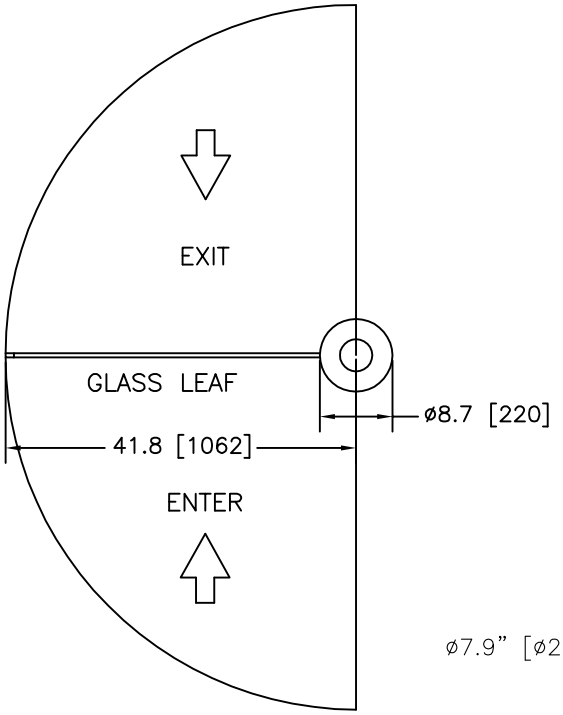


### MATERIALS

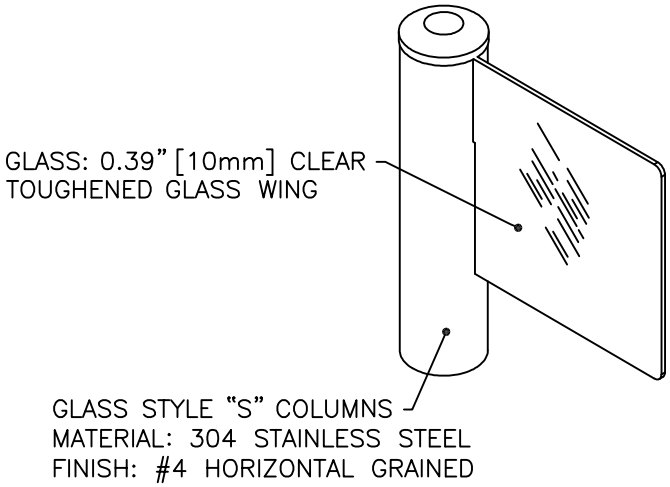


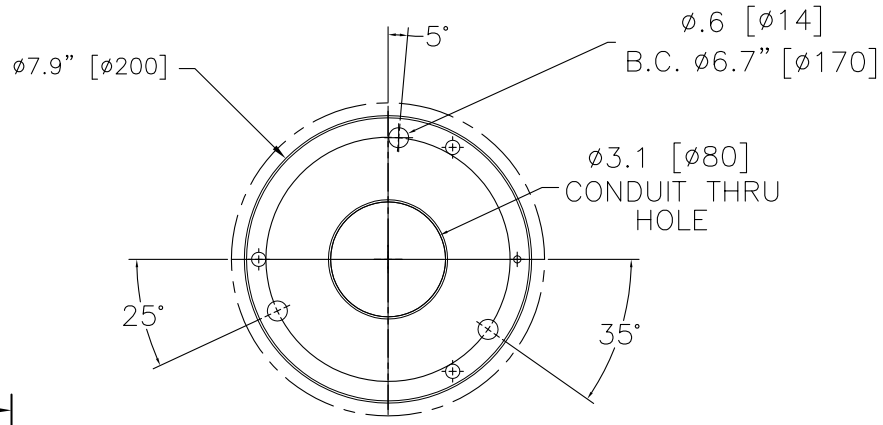


### ELEVATION VIEW

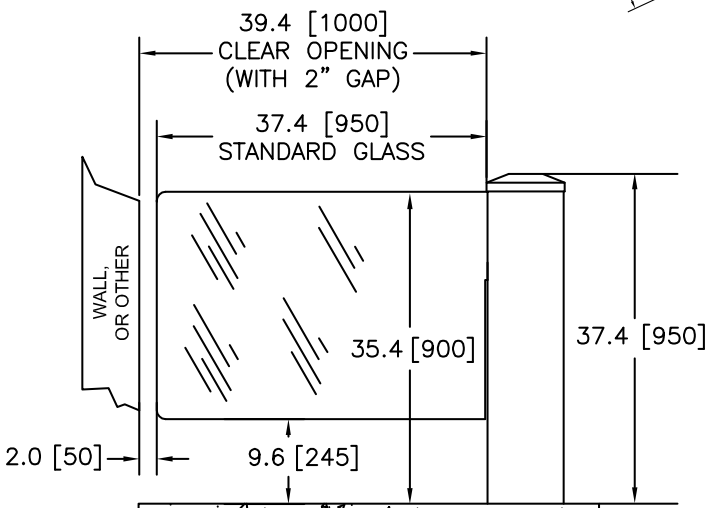


### ROTOR BASE

*Mounting Detail*

GUNNEBO®
For a safer world

# GlasStile S

## Motorized ADA Compliant Entrance Gate

### ADDITIONAL PHOTOS

GUNNEBO®
For a safer world

# GlasStile S

## Motorized ADA Compliant Entrance Gate

### CONTACT & ADDITIONAL PHOTOS

*For further information, please contact:*

**Gunnebo Entrance Control Inc.**
**535 Getty Ct., Benicia, CA 94510**
**Tel: 513-666-4821**
**Email: info@gunnebo.us**

*Gunnebo Entrance Control, Inc. is a company within the Gunnebo Group:*

**Gunnebo AB**
**Box 5181 SE-402 26 Goteborg, Sweden**
**Tel: +46 31 83 68 00**
**Fax: + 46 31 83 68 10**
**www.gunnebo.com**

Note: In pursuit of its policy of continuous refinement and improvement, Gunnebo Entrance Control reserves the right to modify design and details at any time and without notice.

FOR A SAFER WORLD GUNNEBO

GUNNEBO®
*For a safer world*